Revision	Item	History	Date
REV:0.1	1	Initial	2017.02.22
REV:0.11	1	Change BOM - a. R24 change from 10K to NC. b. R1,R3,R5 change from 4.7K to 2.2K	2017.03.17

深圳领见科技有限公司

[CONFIDENTIAL, DO NOT DISCLOSE]

SiS TECHNOLOGY CO.,LTD

Title: History

Size	Document Number	Rev
A	SiS99596+SiS9202_DM board	V0.11

Date: Friday, March 17, 2017 Sheet 1 of 4

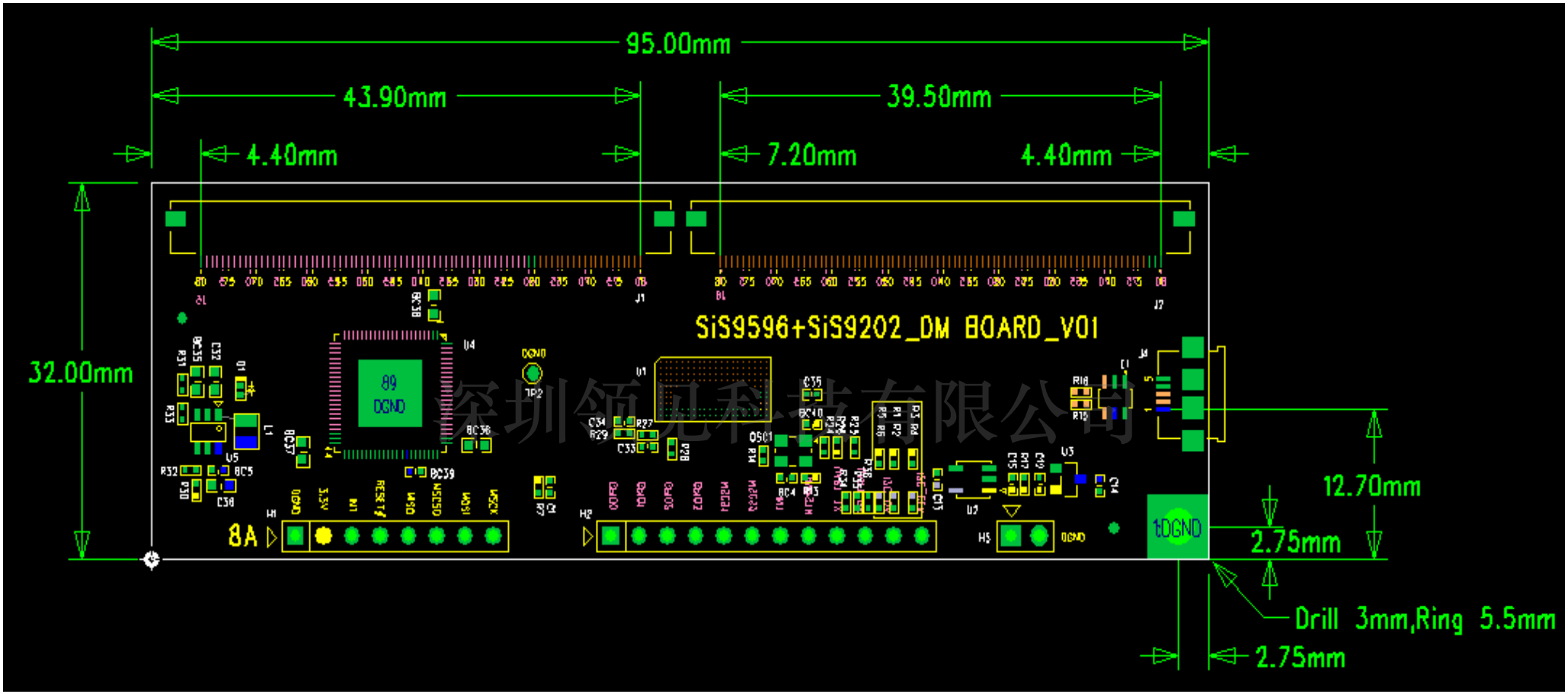

深圳领见科技有限公司

[CONFIDENTIAL, DO NOT DISCLOSE]

Silicon Integrated Systems Corp.

Title	Placement	
Size A4	Document Number SiS99596+SiS9202_DM board	Rev V0.11
Date: Friday, March 17, 2017	Sheet 2 of 4	

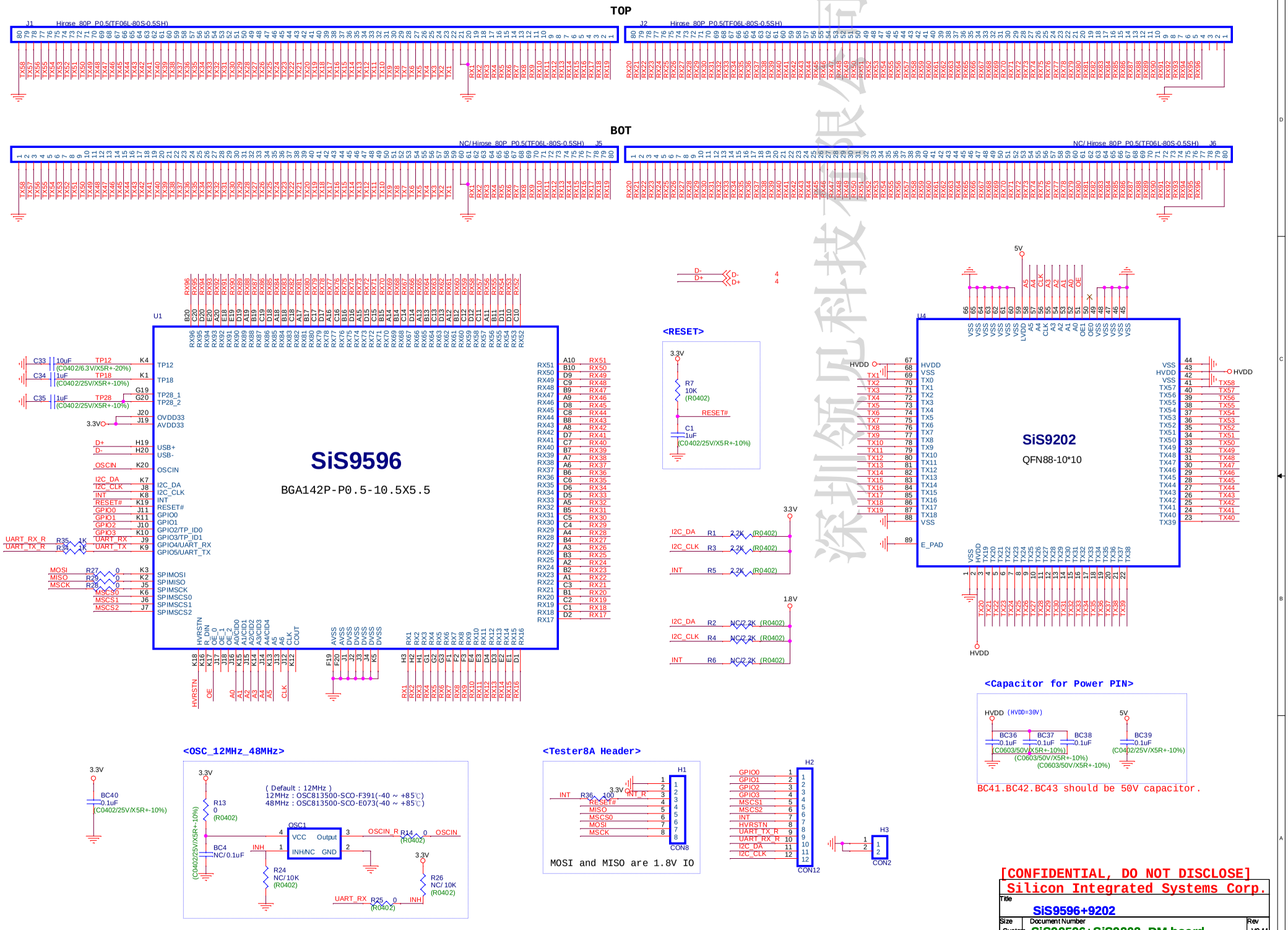
TOP
J1 Hirose_80P_P0.5(TF06L-80S-0.5SH)
J2 Hirose_80P_P0.5(TF06L-80S-0.5SH)
BOT
NC/ Hirose_80P_P0.5(TF06L-80S-0.5SH) J5
NC/ Hirose_80P_P0.5(TF06L-80S-0.5SH) J6
U1
SiS9596
BGA142P-P0.5-10.5X5.5
U4
SiS9202
QFN88-10*10
<RESET>
R7
10K
(R0402)
RESET#
C1
1uF
(C0402/25V/X5R+-10%)
<OSC_12MHz_48MHz>
(Default : 12MHz)
12MHz : OSC813500-SCO-F391(-40 ~ +85℃)
48MHz : OSC813500-SCO-E073(-40 ~ +85℃)
OSC1
VCC Output
INH/NC GND
OSCIN_R
OSCIN
<Tester8A Header>
H1
CON8
MOSI and MISO are 1.8V IO
H2
CON12
H3
CON2
<Capacitor for Power PIN>
HVDD (HVDD=30V)
BC36
BC37
BC38
BC39
0.1uF
(C0603/50V/X5R+-10%)
(C0402/25V/X5R+-10%)
BC41.BC42.BC43 should be 50V capacitor.
[CONFIDENTIAL, DO NOT DISCLOSE]
Silicon Integrated Systems Corp.
Title
SiS9596+9202
Size
Custom
Document Number
SiS99596+SiS9202_DM board
Rev
V0.11
Date: Friday, May 19, 2017
Sheet 3 of 4

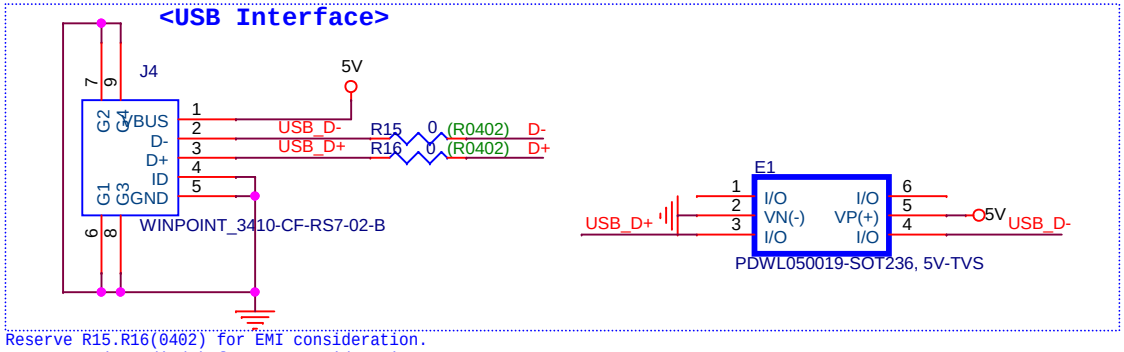

Reserve R15.R16(0402) for EMI consideration.
Reserve E1(TVS diode) for ESD consideration.
E1 place near J4, and R15/R16 place next to E1.

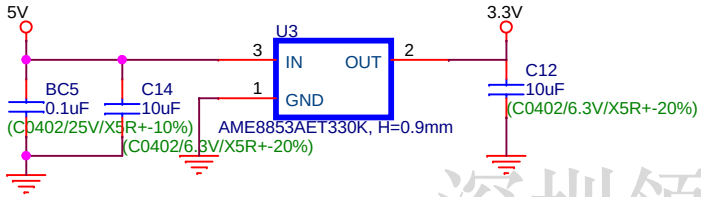

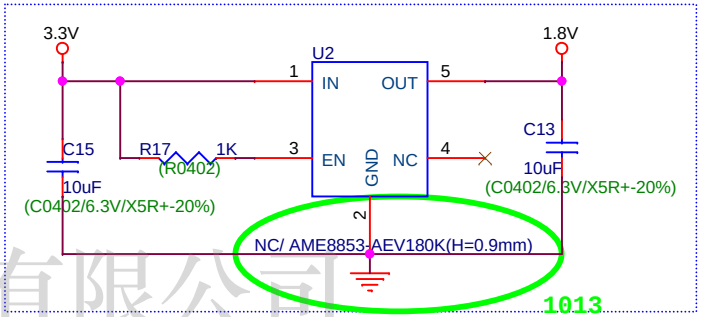

深圳领见科技有限公司

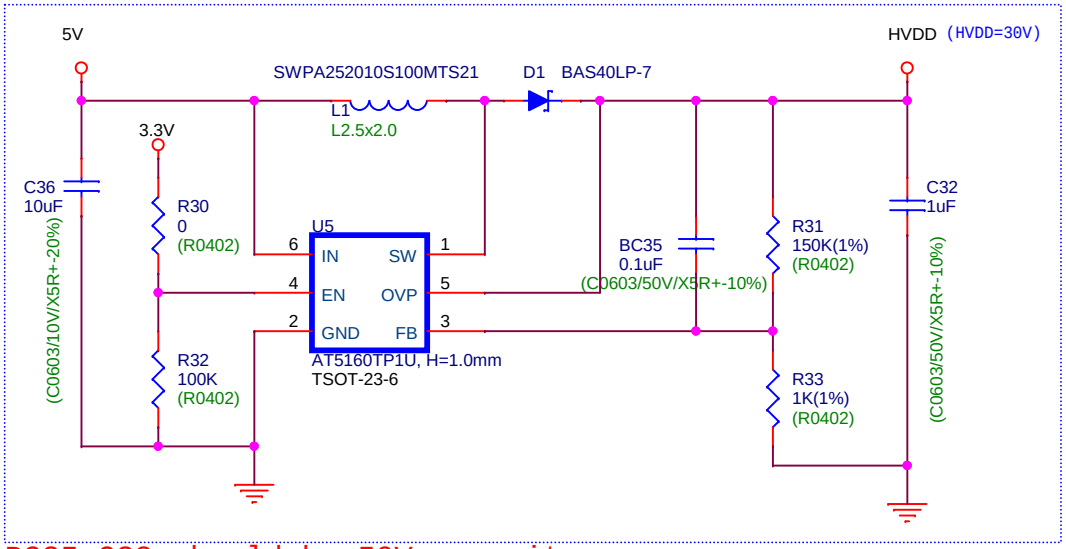

BC35.C32 should be 50V capacitor.

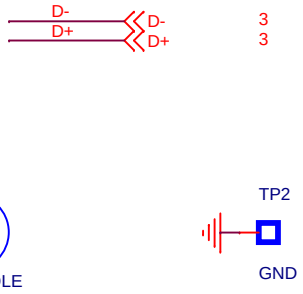

[CONFIDENTIAL, DO NOT DISCLOSE]
Silicon Integrated Systems Corp.

Title	POWER	
Size A4	Document Number SiS99596+SiS9202_DM board	Rev V0.11
Date: Friday, March 17, 2017	Sheet 4 of 4	